Lofrans®
WINDLASSES

AIRON
code: B.05.101 – Rev. A
date: 01–2007

RM 1574

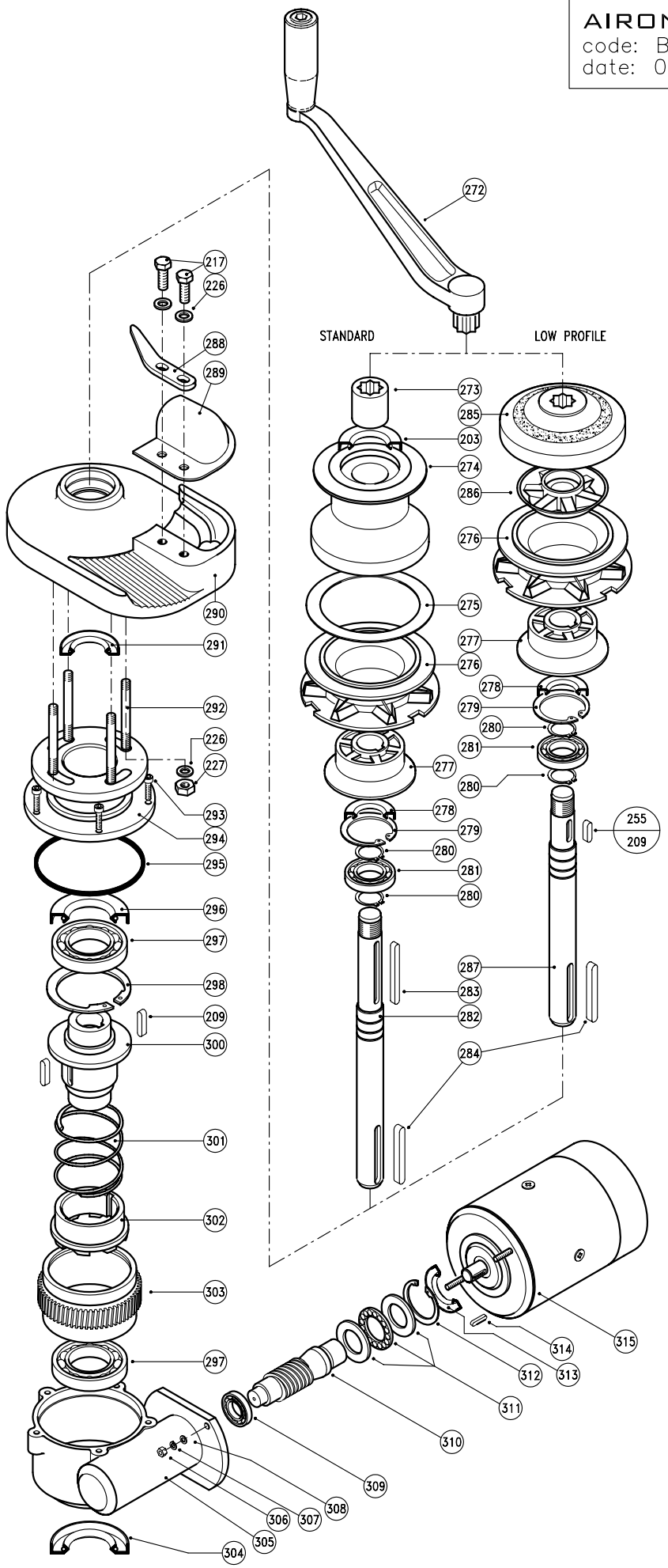

AIRON

Item	Description	Kit	Q.ty
203	Seal - 35x45x7	Kit A	1
209	Key - 6x6x30	Kit C	3
217	Hex hd screw M8x20	Kit B	2
226	Washer for screw M8	Kit B	6
227	Nut - M8	Kit B	4
255	Key - 6x6x25	Kit C	1
272	Handle		1
273	Clutch nut		1
274	Drum		1
275	Washer		1
276a	Gipsy chain 6 Iso - Din 766		1
276b	Gipsy chain 7 Iso - 1/4" G40		1
276c	Gipsy chain 8 Iso - Din 766 - 5/16" BBB		1
276d	Gipsy chain 5/16 G40		1
276e	Gipsy chain 10 Iso - 3/8 G40		1
276f	Gipsy chain 3/8 Din 766 - 10 Din 766		1
276g	Gipsy chain 3/8 BBB		1
276h	Gipsy chain 3/8 PC		1
277	Clutch cone - inner		1
278	Seal - 25x47x7	Kit A	1
279	Circlip - 47 Din 472	Kit D	1
280	Circlip - 25 Din 471	Kit D	2
281	Bearing - 16005		1
282	Main shaft		1
283	Key - 6x6x80	Kit C	1
284	Key - 8x7x60	Kit C	1
285	Gipsy cap		1
286	Cone clutch		1
287a	Main shaft for gipsy type: a - b - c		1
287b	Main shaft for gipsy type: d - e - f - g - h		1
288a	Stripper for gipsy type: a - b - c		1
288b	Stripper for gipsy type: d - e - f - g - h		1
289	Cover		1
290	Base		1
291	Seal - 25x35x7	Kit A	1
292a	Stud - M8x75		4
293	Hex hd screw M5x16	Kit B	5
294	Gearcase - upper		1
295	O Ring seal - 4387	Kit A	1
296	Seal - 40x56x8	Kit A	1
297	Bearing - 16008		2
298	Circlip - 78 Din 472	Kit D	1
300	Sleeve		1
301	Spring		1
302	Dog clutch		1
303a	Wormwheel		1
304	Seal - 40x55x7	Kit A	1
305	Gearcase - lower		1
306	Nut - M6	Kit B	2
307	Spring washer for screw M6	Kit B	2
308	Washer for screw M6	Kit B	2
309	Bearing - 6203		1
310	Worm		1
311	Thrust bearing - 51105		1
312	Circlip - 43 Din 472	Kit D	1
313	Seal - 25x43x9	Kit A	1
314	Key - 5x5x15	Kit C	1
315a	Electric motor 700W 12V		1
315b	Electric motor 700W 24V		1
315c	Electric motor 1000W 12V		1
315d	Electric motor 1000W 24V		1

Item	Description	Kit	Q.ty
KA05101	Kit A - Seals		1
KB05101	Kit B - Screw&Nuts		1
KC05101	Kit C - Keys		1
KD05101	Kit D - Circlips		1