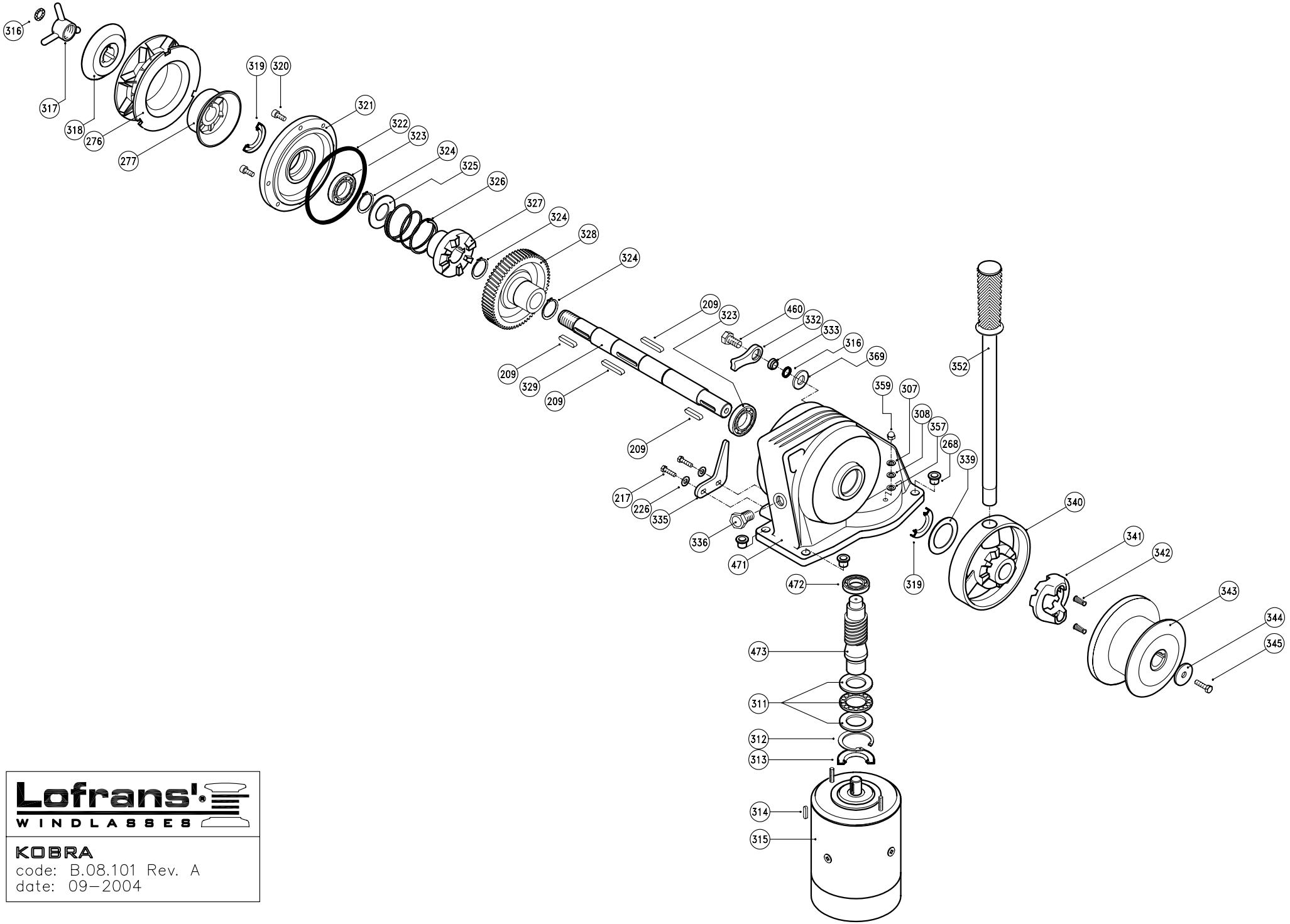

Lofrans'
WINDLASSES

KOBRA
code: B.08.101 Rev. A
date: 09-2004

KOBRA

Item	Description	Kit	Q.ty
209	Key - 6x6x30	Kit C	4
217	Hex hd screw M8x20	Kit B	2
226	Washer for screw M8	Kit B	2
268	Nylon bush		4
276a	Gipsy chain 6 Iso - Din 766		1
276b	Gipsy chain 7 Iso - 1/4" G40		1
276c	Gipsy chain 8 Iso - Din 766 - 5/16" BBB		1
276d	Gipsy chain 5/16 G40		1
276e	Gipsy chain 10 Iso - 3/8 G40		1
276f	Gipsy chain 3/8 Din 766 - 10 Din 766		1
276g	Gipsy chain 3/8 BBB		1
276h	Gipsy chain 3/8 PC		1
277	Clutch cone - inner		1
307	Spring washer for screw M6	Kit B	2
308	Washer for screw M6	Kit B	2
311	Thrust bearing - 51105		1
312	Circlip - 43 Din 472	Kit D	1
313	Seal - 25x43x9	Kit A	1
314	Key - 5x5x15	Kit C	1
315a	Electric motor 700W 12V		1
315b	Electric motor 700W 24V		1
315c	Electric motor 1000W 12V		1
315d	Electric motor 1000W 24V		1
316	O Ring seal - 117	Kit A	2
317	Wingnut		1
318a	Clutch cone - outer		1
318b	Clutch cone- outer (for gipsy type e-f-g-h)		1
319	Seal - 25x42x6	Kit A	2
320	Hd cap screw - M6x16	Kit B	4
321	Cover		1
322	O Ring seal - 4437	Kit A	1
323	Bearing - 6005		2
324	Circlip - 25 Din 471	Kit D	3
325	Washer		1
326	Spring		1
327	Dog clutch		1
328	Wormwheel		1
329	Main shaft		1
332	Pawl		1
333	Spacer		1
335	Stripper		1
336	Oil plug 3/8”		1
339	Nylon washer		1
340	Emergency wheel		1
341	Emergency dog clutch		1
342	Spring		2
343	Drum		1
344	Washer		1
345	Hex hd screw M6x20	Kit B	1
352a	Handle		1
357	Nylon washer for screw M6	Kit B	2
359	Cap nut M6	Kit B	2
369	Washer for screw M10	Kit B	1
460	Hex hd screw M10x20	Kit B	1
471	Body		1
472	Bearing - 16100		1
473	Worm		1

Item	Description	Kit	Q.ty
KA08101	Kit A - Seals		1
KB08101	Kit B - Screw&Nuts		1
KC08101	Kit C - Keys		1
KD08101	Kit D - Circlips		1