Lofrans'®
WINDLASSES

PROJECT X3 PLUS

code: B.37.102 – Rev. A
date: 07–2006

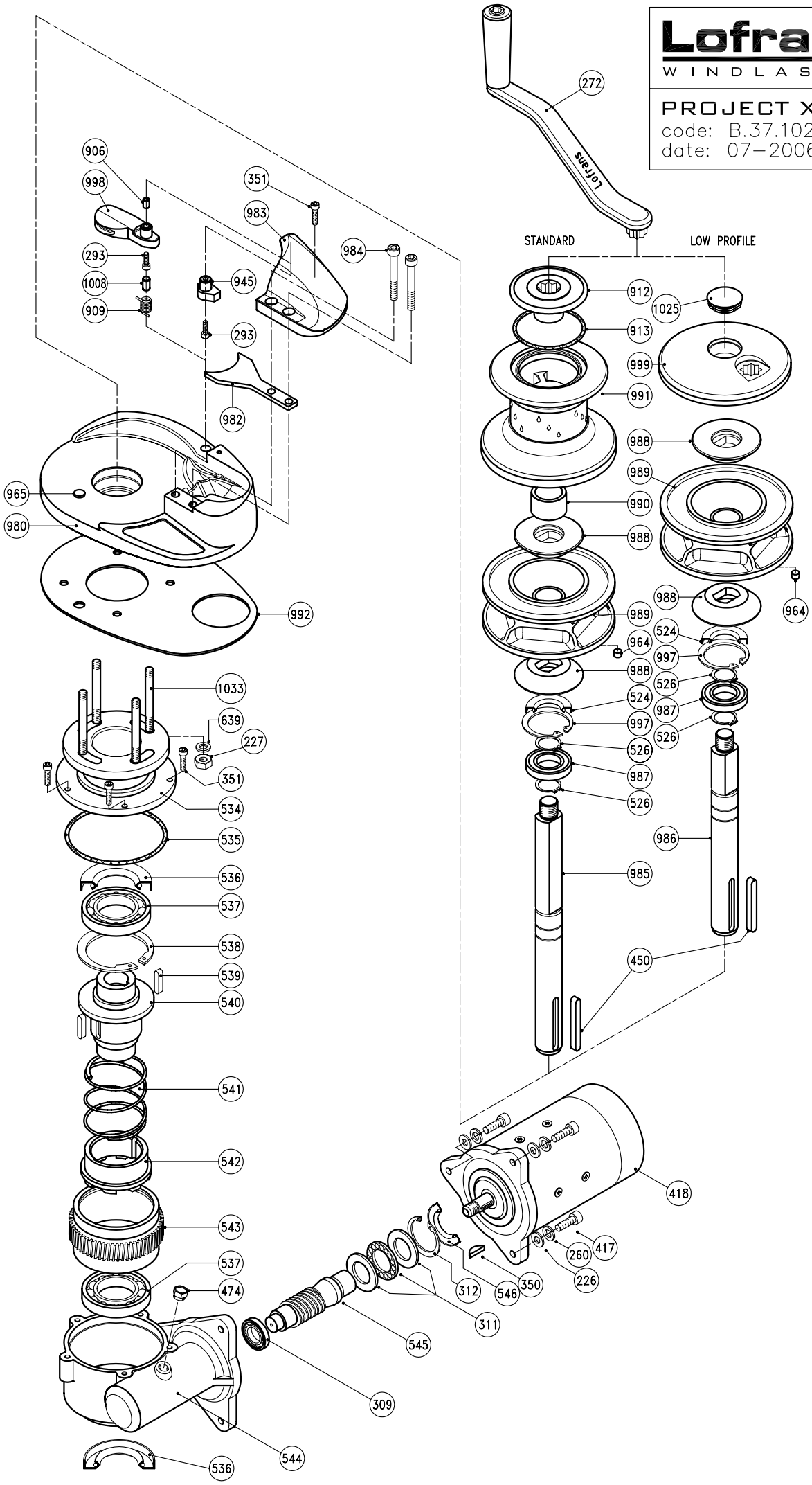

PROJECT X3 PLUS

Item	Description	Kit	Q.ty
226	Washer for screw M8	Kit B	3
227	Nut - M8	Kit B	4
260	Spring washer for screw M8	Kit B	3
272	Handle		1
293	Hd cap screw - M5x16	Kit F	1
309	Bearing - 6203		1
311	Thrust bearing - 51105		1
312	Circlip - 43 Din 472	Kit D	1
350	Round key - 4x6,5	Kit C	1
351	Hd cap screw - M6x20	Kit B	7
417	Hex hd screw - M8x30	Kit B	3
418a	Electric motor 1200W 12V		1
418b	Electric motor 1200W 24V		1
418c	Electric motor 1500W 12V		1
418d	Electric motor 1500W 24V		1
450	Key - 8x7x80	Kit C	1
474	Oil plug 1/4"		1
524	Seal - 30x55x10	Kit A	1
526	Circlip - 30 DIN 471	Kit D	2
534	Gearcase - upper		1
535	O Ring - 4500	Kit A	1
536	Seal - 45x60x7	Kit A	2
537	Bearing - 16009		2
538	Circlip - 100 DIN 472	Kit D	1
539	Key - 8x7x35	Kit C	2
540	Sleeve		1
541	Spring		1
542	Dog clutch		1
543	Wormwheel		1
544	Gearcase - lower		1
545	Worm		1
546	Seal - 25x45x10	Kit A	1
639	Washer for screw M8	Kit B	4
906	Spacer	Kit F	1
909	Spring	Kit F	1
912	Clutch nut		1
913	O Ring - 3287	Kit A	1
945	Cap	Kit F	1
964	Magnet	Kit S	1
965	Sensor	Kit S	1
980c	Stainless steel base		1
981	Support		1
982	Stripper		1
983c	Stainless steel cover		1
984	Hd cap screw - M8x50	Kit B	2
985	Std main shaft		1
986	LP main shaft		1
987	Stainless steel bearing - 6006 2RS		1
988	Clutch cone		2
989a	Gipsy ∅8 Iso		1
989b	Gipsy ∅10 Iso - ∅3/8” G40		1
989c	Gipsy ∅10 Din766		1
989d	Gipsy ∅12 Iso-∅13 Din766		1
990	Spacer		1
991b	Stainless steel drum		1
992	Gasket		1
997	Circlip - 55 DIN 472	Kit D	1
998b	Stainless steel finger	Kit F	1
999b	Stainless steel gipsy cap		1
1008	Pivot - 8x14	Kit F	1
1025	Cap		1
1033	Stud - M8x105		4

Item	Description	Kit	Q.ty
KA32101	Kit A - Seals		1
KB32101	Kit B - Screws&Nuts		1
KC06101	Kit C - Keys		1
KD06101	Kit D - Circlips		1
KF32102	Kit F - Finger		1
KS36101	Kit S - Sensor&magnet		1