Lofrans®
WINDLASSES

PROGRESS I
code: B.16.101 Rev. B
date: 11-2005

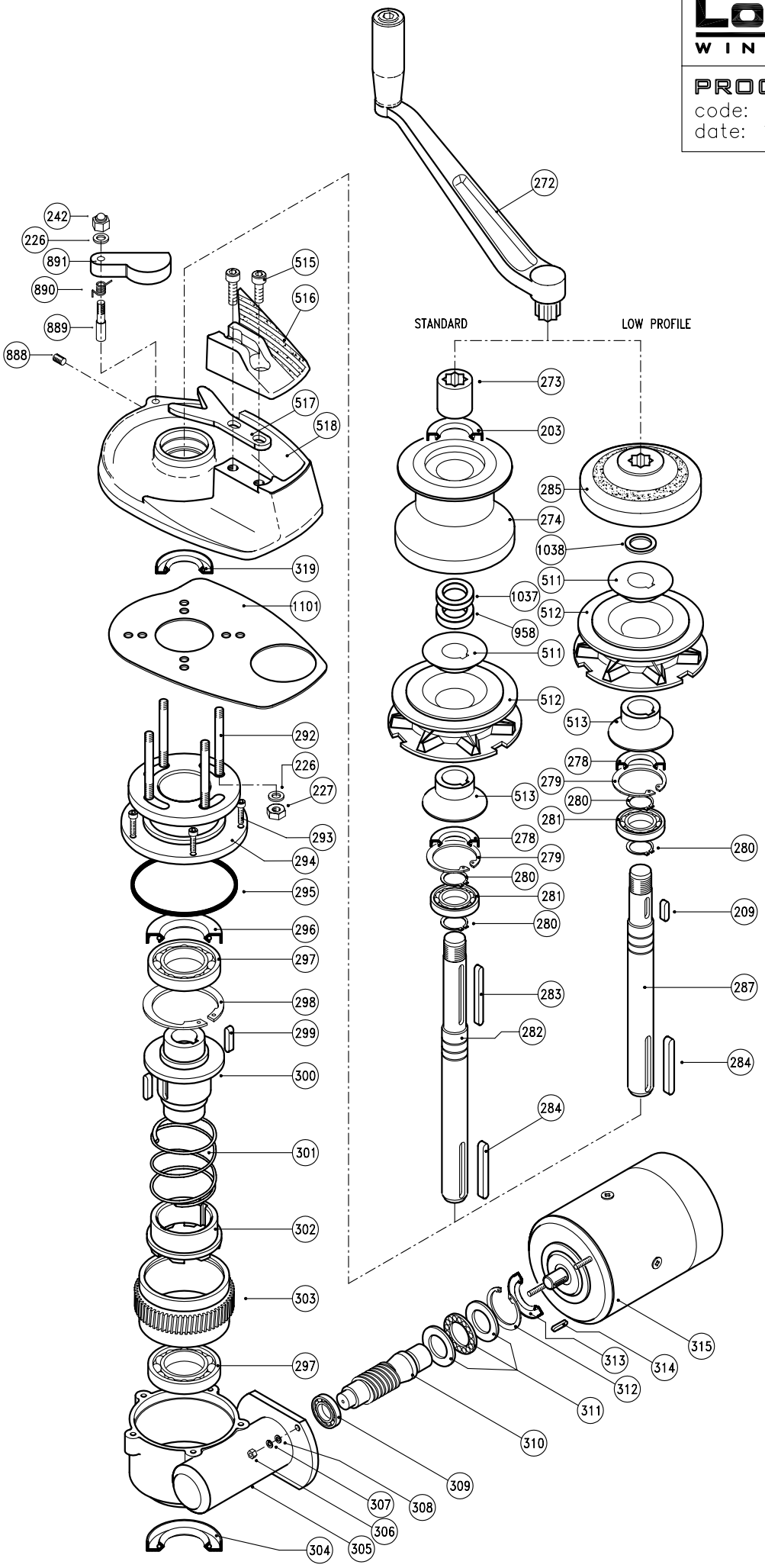

PROGRESS I

Item	Description	Kit	Q.ty
203	Seal - 35x45x7	Kit A	1
209	Key - 6x6x30	Kit C	1
226	Washer for screw M8	Kit B	5
227	Nut - M8	Kit B	4
242	Cap nut M8	Kit B	1
272	Handle		1
273	Clutch nut		1
274a	Drum		1
274b	Chromed bronze drum		1
278	Seal - 25x47x7	Kit A	1
279	Circlip - 47 Din 472	Kit D	1
280	Circlip - 25 Din 471	Kit D	2
281	Bearing - 16005		1
282	Main shaft		1
283	Key - 6x6x80	Kit C	1
284	Key - 8x7x60	Kit C	1
285	Gipsy cap		1
287b	Low profile main shaft		1
292a	Stud M8x75		4
293	Hex hd screw M5x16	Kit B	5
294	Gearcase - upper		1
295	O Ring seal - 4387	Kit A	1
296	Seal - 40x56x8	Kit A	1
297	Bearing - 16008		2
298	Circlip - 78 Din 472	Kit D	1
299	Key - 6x6x30	Kit C	2
300	Sleeve		1
301	Spring		1
302	Dog clutch		1
303a	Wormwheel		1
304	Seal - 40x55x7	Kit A	1
305	Gearcase - lower		1
306	Nut - M6	Kit B	2
307	Spring washer for screw M6	Kit B	2
308	Washer for screw M6	Kit B	2
309	Bearing - 6203		1
310a	Worm		1
311	Thrust bearing - 51105		1
312	Circlip - 43 Din 472	Kit D	1
313	Seal - 25x43x9	Kit A	1
314	Key - 5x5x15	Kit C	1
315a	Electric motor 700W 12V		1
315b	Electric motor 700W 24V		1
315c	Electric motor 1000W 12V		1
315d	Electric motor 1000W 24V		1
319	Seal 25-42-6	Kit A	1
511	Clutch cone - outer		1
512	Gipsy		1
513	Clutch cone - inner		1
515	Hd cap screw M8x25	Kit B	2
516a	Cover		1
516b	Chromed bronze cover		1
517	Stripper		1
518a	Base		1
518b	Chomed bronze base		1
888	Screw		1
889	Pivot		1
890	Spring		1
891a	Finger		1
891b	Chromed bronze finger		1
958	Spacer		1
1037	Spacer		1
1038	Washer		1
1101	Gasket		1

Item	Description	Kit	Q.ty
KA05101	Kit A - Seals		1
KB16101	Kit B - Screw&Nuts		1
KC05101	Kit C - Keys		1
KD05101	Kit D - Circlips		1