Lofrans'
WINDLASSES

TITAN - A
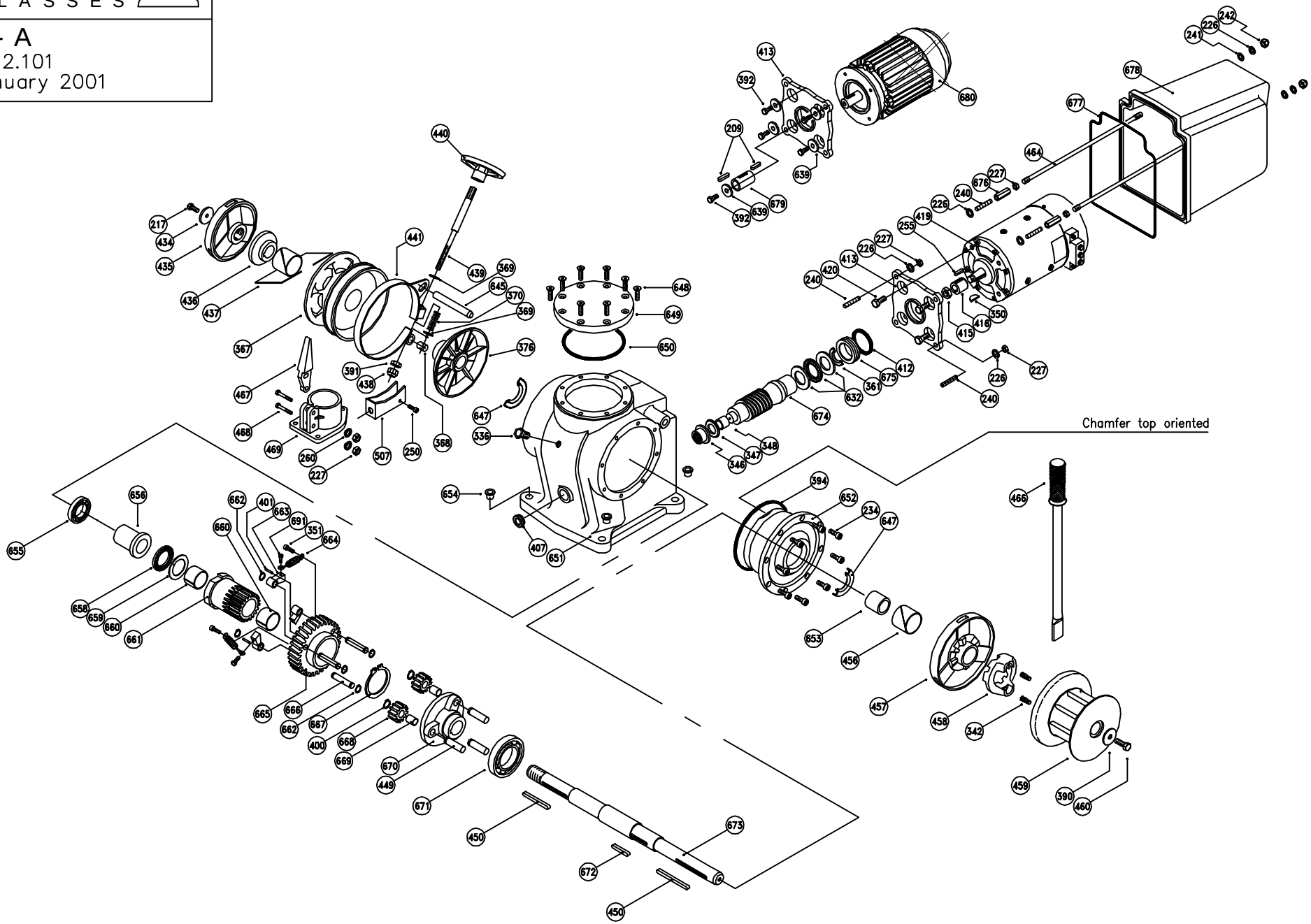
code: B.12.101
date: January 2001