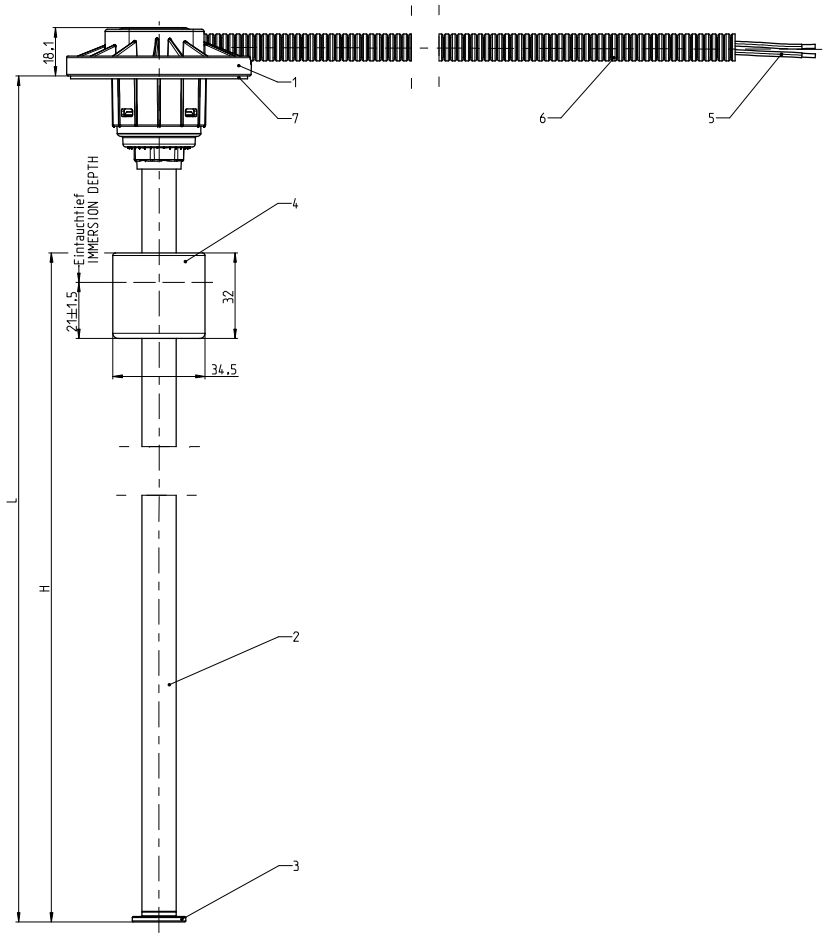

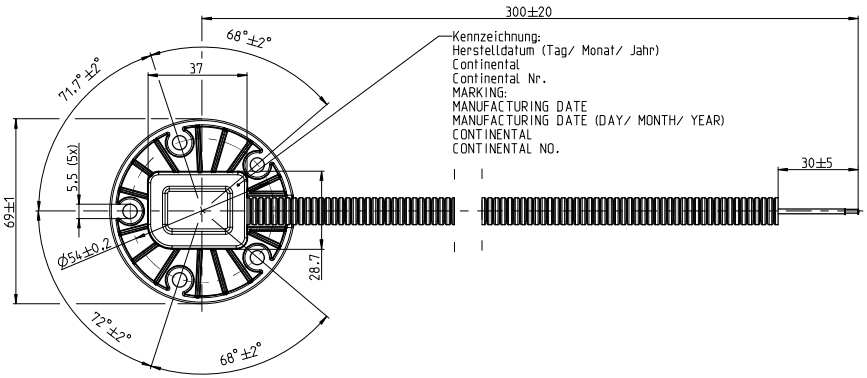

BEMERKUNGEN

NOTES

Herstellernr. MANUFACTURER NO.	Einzelverpackung SINGLE PACKAGING	Laenge L LENGTH L ± 2 mm	R bei Voll R AT FULL ± 1 Ω	R bei Leer R AT EMPTY ± 2.5 Ω	Gewicht WEIGHT g ± 10 %
2910000847500	2910002233700	150.0	1.0	90.9	135
2910000847600	2910002233800	200.0			160
2910000847700	2910002233900	250.0			185
2910000847800	2910002234000	300.0			210
2910000847900	2910002234100	350.0			235
2910000848000	2910002234200	400.0			260
2910000848100	2910002234300	450.0			285
2910000848200	2910002234400	500.0			310
2910000848300	2910002234500	550.0			335
2910000848400	2910002234600	600.0			360
2910000848600	2910002234700	650.0			385
2910000848700	2910002234800	700.0			410
2910000848800	2910002234900	750.0			435
2910000848900	2910002235000	800.0			453

Betriebsdaten:

Betriebstemperatur: -40 °C bis +85 °C

Lagertemperatur: -40 °C bis +85 °C

Elektrische Anschlussdaten und Pruefbedingungen:
- Betriebsspannung: 6 bis 24 V
- Betriebsstrom bei Rmax.: MAX. 100 mA
- Pruefstrom: 10 mA
- Leistung: 125 mW

Nicht kurzschlussfest nach positiver Betriebsspannung (Bordnetz)
Nicht impulsfest nach ISO 7637: 2002-03

Schutzgrad: ISO 16750-F-L-G-H-A-IP67 IP6k9k;

Pruefhubrichtung: von Voll nach Leer

Max. Schraeglage: ± 15 ° zur Senkrechten

Kraftstoffbestaendigkeit:
- Ottokraftstoffe nach DIN EN 228: 2014-10
- Diesel Kraftstoff nach DIN EN 590: 2014-04
- Diesel Kraftstoff nach DIN EN 14214: 2014-06
- Testfluessigkeit: SHELLSOL D40

OPERATING DATA:

OPERATING TEMPERATURE: -40 °C TO +85 °C

STORAGE TEMPERATURE: -40 °C TO +85 °C

ELECTRICAL CONNECTING DATA AND TEST CONDITIONS:
- OPERATING VOLTAGE: 6 TO 24 V
- OPERATING CURRENT AT RMAX.: MAX. 100 mA
- TEST CURRENT: 10 mA
- RATED POWER: 125 mW

NOT SHORT CIRCUIT PROTECTED WITH POSITIVE POTENTIAL DIFFERENCE
(VEHICLE ELECTRICAL SYSTEM)
NOT IMPULSE PROTECTED ACCORDING TO ISO 7637: 2002-03

PART PROTECTION GRADE: ISO 16750-F-L-G-H-A-IP67 IP6k9k;

TEST SWEEP DIRECTION: FROM FULL TO EMPTY

MAX. DIAGONALLY POSITION: ± 15 ° TO VERTICALITY

FUEL RESISTANCE:
- PETROL ACC. TO DIN EN 228: 2014-10
- DIESEL FUEL ACC TO DIN EN 590: 2014-04
- DIESEL FUEL ACC TO DIN EN 14214: 2014-06
- TEST FLUID: SHELLSOL D40

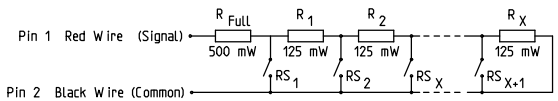

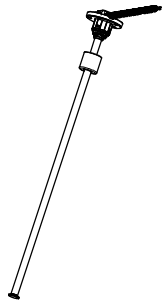

1:5

28.0130-0001.6.00

Nr. NO.	Anzahl QTY.	Einzelteil PART	Material MATERIAL
7	1	Dichtung GASKET	NBR
6	1	Wellrohr CORRUGATED TUBE	PP
5	1	Kabel CABLE	PVC 2 x 0.5 mm² / ISO 6722
4	1	Schwimmer FLOAT	NBR schwarz / BLACK - SHORE A 75
3	1	Abschlussdeckel CLOSING COVER	Edelstahl / STAINLESS STEEL
2	1	Rohr TUBE	Edelstahl / STAINLESS STEEL
1	1	Flansch FLANGE	Kunststoff / PLASTIC

DOC. VERS.	CHANGED ITEMS	ZONE IN GRID	CHANGE DESCRIPTION	ECM NO.
AA	-	-	-	-

CREATED BY: Uwe.Emrich — DATE: 2019-10-25 — DEPARTMENT: I CVAM IAM PPM CCS T

REVIEWED BY: - — DATE: - — DEPARTMENT: -

RELEASED BY: Dietmar.Schultz — DATE: 2019-10-28 — DEPARTMENT: I CVAM RD ME VCU

TITLE: level sensor
TUBULAR REED SWITCH SENSOR 91 - 1 0hm
Vorratssensor

DOCUMENT NO.: 41517821 — DOC. TYPE: DRW — DOC. PART: 000 — DOC. VERS.: AA

MATERIAL: - — CALCULATED WEIGHT: - g ± - %

SURFACE: - — GENERAL TOLERANCE: - — TOLERANCE PRINCIPLE: Size ISO 14405 (E)

3D MODEL: 41517821_cad_000.asm.AA.4.Accepted — DRAWINGS: 41517821_drw_000.drw.AA.33.Accepted

DIMENSION IN MILLIMETERS

Continental

General tolerance acc. to	Permissible angular tolerance
ISO 2768-c	+-1.0 Deg

Range of nominal sizes							
over	0.5	3.0	6.0	30.0	120.0	400.0
up to	3.0	6.0	30.0	120.0	400.0	1000.0
Permissible tolerance for sizes without tolerance specification						
+-	0.20	0.30	0.50	0.80	1.20	2.00

CAD SYSTEM: CREO2 M240

(C)Continental AG 2019

SCALE: 1:1

PAGE: 1 of 2

FORMAT: A 1

THE REPRODUCTION, DISTRIBUTION AND UTILIZATION OF THIS DOCUMENT AS WELL AS THE COMMUNICATION OF ITS CONTENT TO OTHERS WITHOUT EXPRESS AUTHORIZATION IS PROHIBITED. THIS DOCUMENT WILL BE HELD LIABLE FOR THE PAYMENT OF DAMAGES. ALL RIGHTS RESERVED IN THE EVENT OF THE GRANT OF A PATENT/UTILITY MODEL OR DESIGN.

NO GUARANTEE CAN BE GIVEN IN RESPECT OF THE TRANSLATION. IN ALL CASES THE LATEST ENGLISH LANGUAGE VERSION OF THIS DOCUMENT SHALL BE TAKEN AS AUTHORITATIVE.

82.9110-0208.1

Laenge L LENGTH L mm	Hoehe H HEIGHT H mm	R Ohm	Gewicht WEIGHT gr ± 10 %
150	105.0	1.0	135
	105.0	19.0	
	89.3	37.0	
	73.5	54.9	
	57.8	72.9	
	42.0	90.9	

Laenge L LENGTH L mm	Hoehe H HEIGHT H mm	R Ohm	Gewicht WEIGHT gr ± 10 %
200	155.0	1.0	160
	155.0	12.2	
	138.9	23.5	
	122.7	34.7	
	106.6	46.0	
	90.4	57.2	
	74.3	68.4	
	58.1	79.7	
	42.0	90.9	

Laenge L LENGTH L mm	Hoehe H HEIGHT H mm	R Ohm	Gewicht WEIGHT gr ± 10 %
250	205.0	1.0	185
	205.0	9.2	
	188.7	17.3	
	172.4	25.5	
	156.1	33.7	
	139.8	41.9	
	123.5	50.0	
	107.2	58.2	
	90.9	66.4	
	74.6	74.6	
	58.3	82.7	
	42.0	90.9	

Laenge L LENGTH L mm	Hoehe H HEIGHT H mm	R Ohm	Gewicht WEIGHT gr ± 10 %
300	255.0	1.0	210
	255.0	9.2	
	233.7	17.3	
	212.4	25.5	
	191.1	33.7	
	169.8	41.9	
	148.5	50.0	
	127.2	58.2	
	105.9	66.4	
	84.6	74.6	
	63.3	82.7	
	42.0	90.9	

Laenge L LENGTH L mm	Hoehe H HEIGHT H mm	R Ohm	Gewicht WEIGHT gr ± 10 %
350	305.0	1.0	235
	305.0	7.9	
	283.1	14.8	
	261.2	21.7	
	239.3	28.7	
	217.3	35.6	
	195.4	42.5	
	173.5	49.4	
	151.6	56.3	
	129.7	63.2	
	107.8	70.2	
	85.8	77.1	
	63.9	84.0	
	42.0	90.9	

Laenge L LENGTH L mm	Hoehe H HEIGHT H mm	R Ohm	Gewicht WEIGHT gr ± 10 %
400	355.0	1.0	260
	355.0	7.0	
	332.6	13.0	
	310.3	19.0	
	287.9	25.0	
	265.6	31.0	
	243.2	37.0	
	220.9	43.0	
	198.5	48.9	
	176.1	54.9	
	153.8	60.9	
	131.4	66.9	
	109.1	72.9	
	86.7	78.9	
	64.4	84.9	
	42.0	90.9	

Laenge L LENGTH L mm	Hoehe H HEIGHT H mm	R Ohm	Gewicht WEIGHT gr ± 10 %
450	405.0	1.0	285
	405.0	6.3	
	382.3	11.6	
	359.6	16.9	
	336.9	22.2	
	314.3	27.4	
	291.6	32.7	
	268.9	38.0	
	246.2	43.3	
	223.5	48.6	
	200.8	53.9	
	178.1	59.2	
	155.4	64.5	
	132.8	69.7	
	110.1	75.0	
	87.4	80.3	
	64.7	85.6	
	42.0	90.9	

Laenge L LENGTH L mm	Hoehe H HEIGHT H mm	R Ohm	Gewicht WEIGHT gr ± 10 %
500	455.0	1.0	310
	455.0	5.5	
	433.3	10.0	
	411.5	14.5	
	389.8	19.0	
	368.1	23.5	
	346.3	28.0	
	324.6	32.5	
	302.8	37.0	
	281.1	41.5	
	259.4	46.0	
	237.6	50.4	
	215.9	54.9	
	194.2	59.4	
	172.4	63.9	
	150.7	68.4	
	128.9	72.9	
	107.2	77.4	
	85.5	81.9	
	63.7	86.4	
	42.0	90.9	

Laenge L LENGTH L mm	Hoehe H HEIGHT H mm	R Ohm	Gewicht WEIGHT gr ± 10 %
550	505.0	1.0	335
	505.0	5.1	
	483.0	9.2	
	460.9	13.3	
	438.9	17.3	
	416.8	21.4	
	394.8	25.5	
	372.7	29.6	
	350.7	33.7	
	328.6	37.8	
	306.6	41.9	
	284.5	46.0	
	262.5	50.0	
	240.4	54.1	
	218.4	58.2	
	196.3	62.3	
	174.3	66.4	
	152.2	70.5	
	130.2	74.6	
	108.1	78.6	
	86.1	82.7	
	64.0	86.8	
	42.0	90.9	

Laenge L LENGTH L mm	Hoehe H HEIGHT H mm	R Ohm	Gewicht WEIGHT gr ± 10 %
600	555.0	1.0	360
	555.0	4.7	
	532.7	8.5	
	510.4	12.2	
	488.1	16.0	
	465.8	19.7	
	443.5	23.5	
	421.2	27.2	
	398.9	31.0	
	376.6	34.7	
	354.3	38.5	
	332.0	42.2	
	309.7	46.0	
	287.3	49.7	
	265.0	53.4	
	242.7	57.2	
	220.4	60.9	
	198.1	64.7	
	175.8	68.4	
	153.5	72.2	
	131.2	75.9	
	108.9	79.7	
	86.6	83.4	
	64.3	87.2	
	42.0	90.9	

Laenge L LENGTH L mm	Hoehe H HEIGHT H mm	R Ohm	Gewicht WEIGHT gr ± 10 %
650	605.0	1.0	
	605.0	4.5	
	582.5	7.9	
	560.0	11.4	
	537.4	14.8	
	514.9	18.3	
	492.4	21.7	
	469.9	25.2	
	447.4	28.7	
	424.8	32.1	
	402.3	35.6	
	379.8	39.0	
	357.3	42.5	
	334.8	46.0	
	312.2	49.4	
	289.7	52.9	
	267.2	56.3	
	244.7	59.8	
	222.2	63.2	
	199.6	66.7	
	177.1	70.2	
	154.6	73.6	
	132.1	77.1	
	109.6	80.5	
	87.0	84.0	
	64.5	87.4	
	42.0	90.9	

Laenge L LENGTH L mm	Hoehe H HEIGHT H mm	R Ohm	Gewicht WEIGHT gr ± 10 %
700	655.0	1.0	410
	655.0	4.1	
	633.1	7.2	
	611.2	10.3	
	589.3	13.4	
	567.4	16.5	
	545.5	19.6	
	523.6	22.7	
	501.8	25.8	
	479.9	28.9	
	458.0	32.0	
	436.1	35.1	
	414.2	38.2	
	392.3	41.3	
	370.4	44.4	
	348.5	47.5	
	326.6	50.6	
	304.7	53.7	
	282.8	56.8	
	260.9	59.9	
	239.0	63.0	
	217.1	66.1	
	195.3	69.2	
	173.4	72.3	
	151.5	75.4	
	129.6	78.5	
	107.7	81.6	
	85.8	84.7	
	63.9	87.8	
	42.0	90.9	

Laenge L LENGTH L mm	Hoehe H HEIGHT H mm	R Ohm	Gewicht WEIGHT gr ± 10 %
750	705.0	1.0	435
	705.0	3.9	
	682.9	6.8	
	660.8	9.7	
	638.7	12.6	
	616.6	15.5	
	594.5	18.4	
	572.4	21.3	
	550.3	24.2	
	528.2	27.1	
	506.1	30.0	
	484.0	32.9	
	461.9	35.8	
	439.8	38.7	
	417.7	41.6	
	395.6	44.5	
	373.5	47.4	
	351.4	50.3	
	329.3	53.2	
	307.2	56.1	
	285.1	59.0	
	263.0	61.9	
	240.9	64.8	
	218.8	67.7	
	196.7	70.6	
	174.6	73.5	
	152.5	76.4	
	130.4	79.3	
	108.3	82.2	
	86.2	85.1	
	64.1	88.0	
	42.0	90.9	

Laenge L LENGTH L mm	Hoehe H HEIGHT H mm	R Ohm	Gewicht WEIGHT gr ± 10 %
800	755.0	1.0	453
	755.0	3.6	
	733.4	6.3	
	711.8	8.9	
	690.2	11.6	
	668.6	14.2	
	647.0	16.9	
	625.4	19.5	
	603.8	22.2	
	582.2	24.8	
	560.5	27.4	
	538.9	30.1	
	517.3	32.7	
	495.7	35.4	
	474.1	38.0	
	452.5	40.7	
	430.9	43.3	
	409.3	46.0	
	387.7	48.6	
	366.1	51.2	
	344.5	53.9	
	322.9	56.5	
	301.3	59.2	
	279.7	61.8	
	258.1	64.5	
	236.5	67.1	
	214.8	69.7	
	193.2	72.4	
	171.6	75.0	
	150.0	77.7	
	128.4	80.3	
	106.8	83.0	
	85.2	85.6	
	63.6	88.3	
	42.0	90.9	

BEMERKUNGEN

NOTES

28.0130-0001.6.00

DOC. VERS.	CHANGED ITEMS	ZONE IN GRID	CHANGE DESCRIPTION	ECM NO.
AA	-	-	-	-

CREATED BY: Uwe.Emrich	DATE: 2019-10-25	DEPARTMENT: I CVAM IAM PPM CCS T
REVIEWED BY: -	DATE: -	DEPARTMENT:
RELEASED BY: Dietmar.Schultz	DATE: 2019-10-28	DEPARTMENT: I CVAM RD ME VCU

TITLE

level sensor

TUBULAR REED SWITCH SENSOR 91 - 1 0hm

Vorratssensor

DOCUMENT NO.	DOC. TYPE	DOC. PART	DOC. VERS.
41517821	DRW	000	AA

MATERIAL: -	CALCULATED WEIGHT: - g ± - %
SURFACE: -	GENERAL TOLERANCE: - / TOLERANCE PRINCIPLE: Size ISO 14405 (E)
3D MODEL: 41517821_cad_000.asm.AA.4.Accepted	DRAWING: 41517821_drw_000.drw.AA.33.Accepted

DIMENSION IN MILLIMETERS

Continental

CAD SYSTEM	SCALE	PAGE
CREO2 M240	1:1	2 of 2

(C)Continental AG 2019

THE REPRODUCTION, DISTRIBUTION AND UTILIZATION OF THIS DOCUMENT AS WELL AS THE COMMUNICATION OF ITS CONTENT TO OTHERS WITHOUT EXPRESS AUTHORIZATION IS PROHIBITED. THE DOCUMENT AS WELL AS BE LIABLE FOR THE PAYMENT OF DAMAGES. ALL RIGHTS RESERVED IN THE EVENT OF THE GRANT OF A PATENT/UTILITY MODEL OR DESIGN.

NO GUARANTEE CAN BE GIVEN IN RESPECT OF THE TRANSLATION. IN ALL CASES THE LATEST ENGLISH LANGUAGE VERSION OF THIS DOCUMENT SHALL BE TAKEN AS AUTHORITATIVE.

FORMAT A 1

82.9110-0208.1