Lofrans®
WINDLASSES

PROJECT X1

code: B.39.101
date: 04-2005

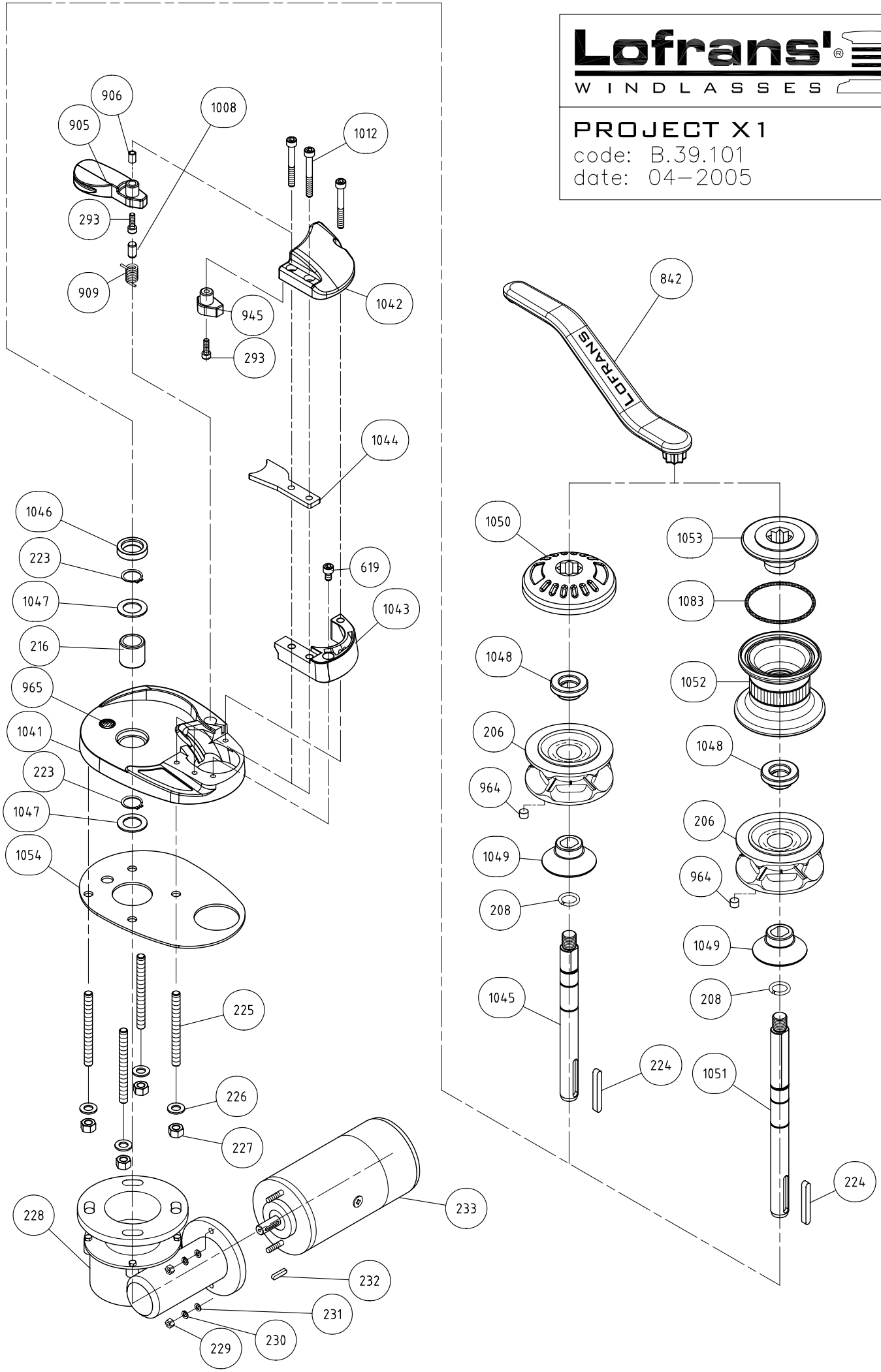

PROJECT X1

Item	Description	Kit	Q.ty
206b	Gipsy chain 6 - 5 pockets		1
206c	Gipsy chain 7 - 6 pockets		1
206d	Gipsy chain 8 - 5 pockets		1
208	Ring	Kit D	1
216	Bush		1
223	Circlip - 18 Din 471	Kit D	2
224	Key - 6x6x45	Kit C	1
225a	Stud M8x58		4
226	Washer for M8 screw	Kit B	4
227	Nut - M8	Kit B	4
228	Gearbox		1
229	Nut - M5	Kit B	2
230	Spring washer for M5 screw	Kit B	2
231	Washer for M5 screw	Kit B	2
232	Key - 4x4x15	Kit C	1
233b	Electric motor 500W 12V		1
233d	Electric motor 700W 12V		1
293	Hd cap screw M5x16	Kit F	1
619	Hd cap screw M6x10	Kit B	1
842a	Handle		1
905b	Stainless steel finger	Kit F	1
906	Spacer	Kit F	1
909	Spring	Kit F	1
945	Cap	Kit F	1
964	Magnet	Kit S	1
965	Sensor	Kit S	1
1008	Pivot 7x14	Kit F	1
1012	Hd cap screw M6x40	Kit B	3
1041a	Base		1
1042a	Cover		1
1043	Support		1
1044	Stripper		1
1045a	Main shaft		1
1046	Seal 18-30-7	Kit A	1
1047	Ring		2
1048	Clutch cone - outer		1
1049	Clutch cone - inner		1
1050	Gipsy cap		1
1051a	Low profile shaft		1
1052a	Drum		1
1053	Nut		1
1054	Gasket		1
1083	O Ring 3250	Kit A	1

Item	Description	Kit	Q.ty
KA33101	Kit A - Seals		1
KB33101	Kit B - Screw&Nuts		1
KC04101	Kit C - Keys		1
KD04101	Kit D - Circlips		1
KF25102	Kit F - Finger		1
KS36101	Kit S - Sensor&magnet		1