Lofrans'®
WINDLASSES

PROGRESS II
code: B.20.101 Rev. B
date: 11-2005

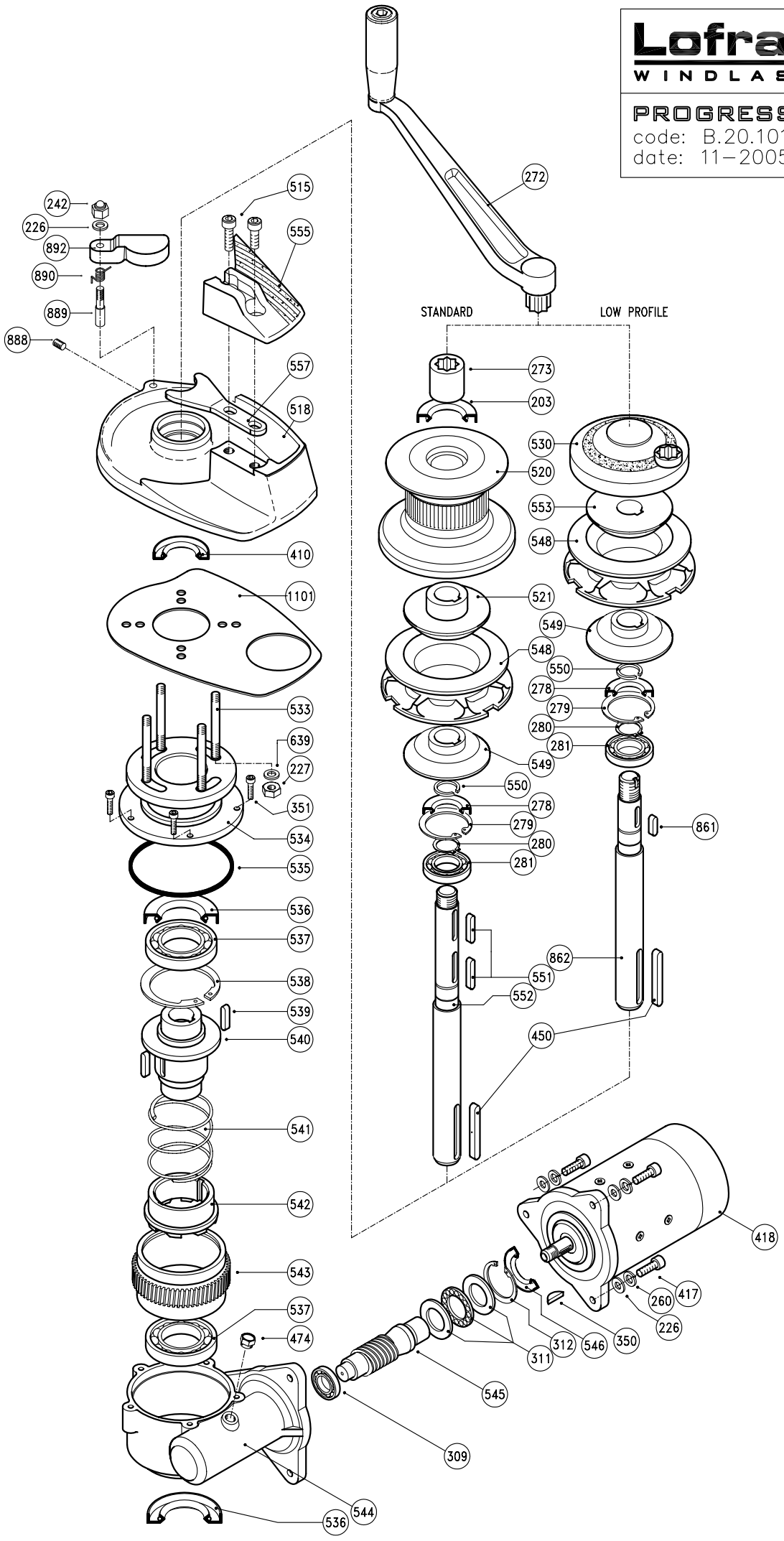

PROGRESS II

Item	Description	Kit	Q.ty
203	Seal - 35x45x7	Kit A	1
226	Washer for screw M8	Kit B	4
227	Nut - M8	Kit B	4
242b	Cap nut self locking M8	Kit B	1
260	Spring washer for screw M8	Kit B	3
272	Handle		1
273	Clutch nut		1
278	Seal - 25x47x7	Kit A	1
279	Circlip - 47 Din 472	Kit D	1
280	Circlip - 25 Din 471	Kit D	1
281	Bearing - 16005		1
309	Bearing - 6203		1
311	Thrust bearing - 51105		1
312	Circlip - 43 Din 472	Kit D	1
350	Round key - 4x6,5	Kit C	1
351	Hd cap screw - M6x20	Kit B	5
410	Seal - 30x42x7	Kit A	1
417	Hex hd screw - M8x30	Kit B	3
418a	Electric motor 1200W 12V		1
418b	Electric motor 1200W 24V		1
418c	Electric motor 1500W 12V		1
418d	Electric motor 1500W 24V		1
450	Key - 8x7x80	Kit C	1
474	Oil plug 1/4"		1
515	Hd cap screw - M8x25	Kit B	2
518a	Base		1
518b	Chromed bronze base		1
520a	Drum		1
520b	Chromed bronze drum		1
521	Clutch cone - outer		1
530	Gipsy cap		1
533a	Stud M8x110		4
534	Gearcase - upper		1
535	O Ring seal - 4500	Kit A	1
536	Seal - 45x60x7	Kit A	2
537	Bearing - 16009		2
538	Circlip - 100 Din 472	Kit D	1
539	Key - 8x7x35	Kit C	2
540	Sleeve		1
541	Spring		1
542	Dog clutch		1
543	Wormwheel		1
544	Gearcase - lower		1
545	Worm		1
546	Seal - 25x45x10	Kit A	1
548	Gipsy chain 10		1
549	Clutch cone - inner		1
550	Ring		1
551	Key - 6x6x55	Kit C	2
552a	Main shaft		1
553	Clutch cone - outer		1
555a	Cover		1
555b	Chromed bronze cover		1
557	Stripper		1
639	Washer for screw M8	Kit B	4
861	Key - 6x6x40	Kit C	1
862a	Main shaft		1
888	Screw - M8x12	Kit B	1
889	Pivot		1
890	Spring		1
892a	Finger		1
892b	Chromed finger		1
1101	Gasket		1

Item	Description	Kit	Q.ty
KA06101	Kit A - Seals		1
KB20101	Kit B - Screw&Nuts		1
KC20101	Kit C - Keys		1
KD20101	Kit D - Circlips		1